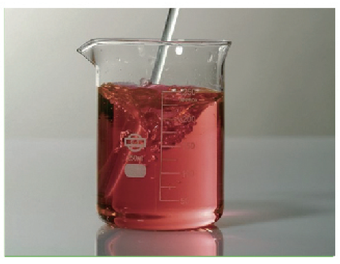

UM

UM 系列增重式批次计量系统

采用模块化设计,适用不同颗粒和片状原材料计量;优化设计无死角的搅拌和混合;优化和准确计量,具有高效率和高精度。4个计量工位，配置标准垂直阀门\微量计量阀\精密螺杆定量装置;不锈钢搅拌仓。

UM series gain-in-weight batch dosing system
Adopting modular design, suitable for metering different granule and flake raw materials;Optimized design for stirring and mixing without dead angle;Optimized and accurate dosing order,high efficiency and accuracy.4 dosing stations, deploying standard vertical valves\ minute quantity metering valve\ precise screw stem dosing device\ stainless steel stirring bin.

UM 시리즈 중량계량식 혼합시스템
본시리즈는 모듈화 디자인으로 다양한 형태의 원료에 사용됩니다.탁월한 디자인으로 원료믹싱과혼합이 충분하며 작업의 정확성과 고효율성,고정밀도를 확보합니다.
기본사양은 4구계량시스템/수직밸브/미량계량밸브/정밀스크루급료장치/스테인레스스틸원료혼합실

Technical Specifications		UM200	UM400	UM750	UM1000
产量/Throughput	kg/h	200	400	750	1000
工位/Dossing station	pcs.	2~4	2~4	2~4	2~4
精度/Accuracy		±0.5%	±0.5%	±0.5%	±0.5%
计量料仓/Metering hopper	dm^3	9	15	15 / 28	14 / 40
称重料仓/Weighing hopper	dm^3	3	7	12	18
混合料仓/Mixing hopper	dm^3	7	12	25	45
安装功率/Installed power	kW	0.5	0.6	1.5	1.5
电压-频率/Volt.-Freq.	V/Hz	380 / 50	380 / 50	380 / 50	380 / 50
重量/Weight	kg	120	150	180	200

Dimensions		UM200	UM400	UM750	UM1000
H	mm	1109	1227	1328	1488
W	mm	796	876	962	1016
D	mm	626	719	793	843

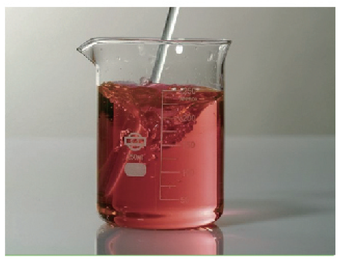

CIV

TCON

CIV色母计量仪是利用螺杆体积式计时原理，专门为注塑成型设备的色母计时添加应用工艺而设计，适用于注塑机规格范围80-2000吨锁模力。
技术特点：
数字式马达控制技术、高精度螺杆喂料技术、同步静态混合技术、与注塑工艺同步技术

CIV masterbatch metering device is the use of screw type volume timing principle, specifically designed for color master timing add application technology of the injection molding equipment, suitable for IMM specifications range 80-2000 tons of clamping force.
Technical features:
Digital motor control technology， High precision screw feeding technology，Synchronous static mixing technology， With injection molding process synchronization technology

CIV 마스터배치계량기는 스크루용량식계량원리를 이용한 장비로서 사출설비에 시간별로 마스터배치를 계량공급하도록 디자인되였습니다.적용범위는 80-2000톤 사출기
기술특징:디지털모타제어기술/고정밀스크루급료기술/동기혼합기술/사출조건과통합화기술

Technical Specifications		CIV06	CIV20
产量/Throughput	kg/h	0.5~8.4	2.3~84
计量料仓/Metering hopper	dm^3	6	20
混合料仓/Mixing hopper	dm^3	2	5
电压-频率/Volt.-Freq.	V/Hz	220 / 50	220 / 50
重量/Weight	kg	24	34

Dimensions		CIV06	CIV20
H	mm	472	632
W	mm	486	700
D	mm	230	394

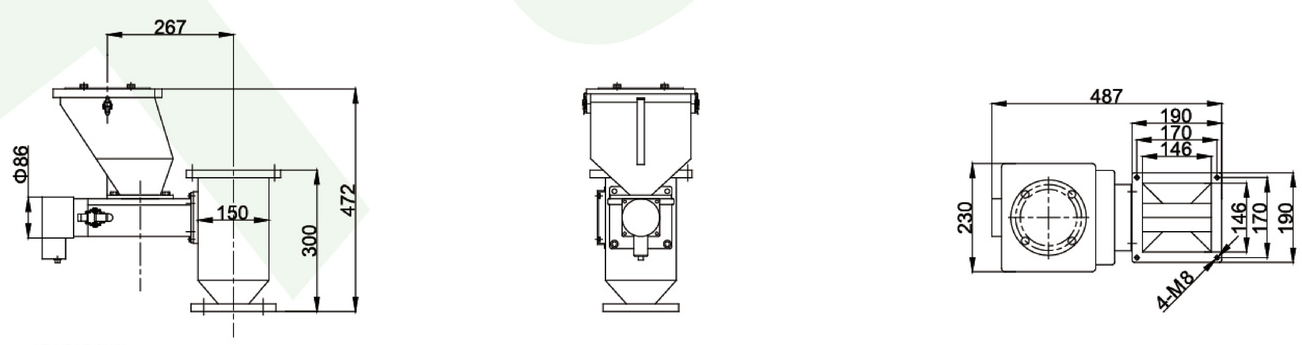

CIV06

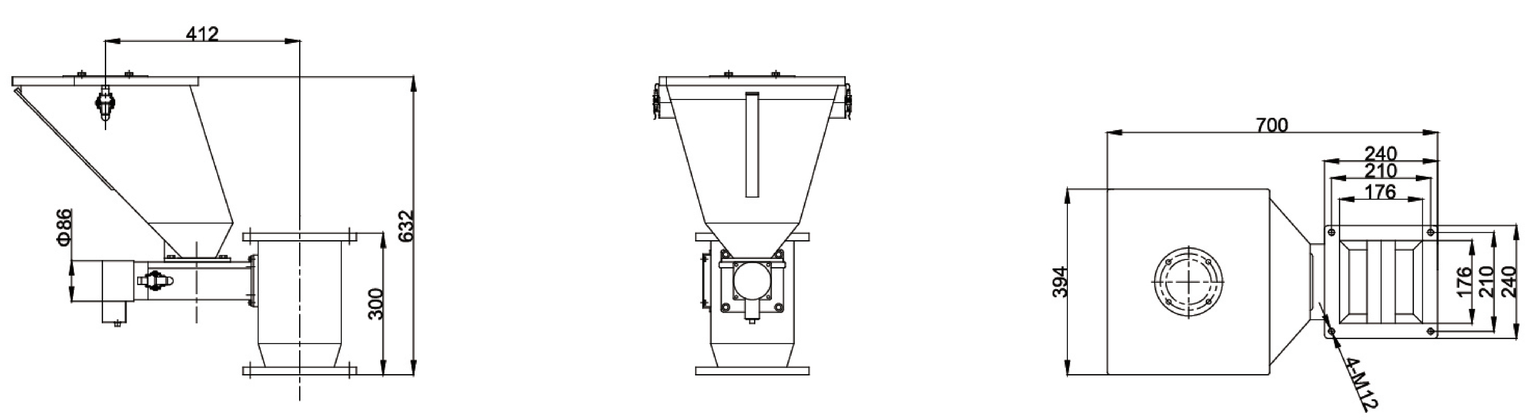

CIV20