MDC25U-200U

TCON

MDC系列除湿式干燥输送一体机是将除湿主机、干燥料桶、输送系统全部安装在一个安全、方便的移动小车上。干燥风的流量从80m³/h 到100m³/h，配置40L/80L/120L/160L200L/300L干燥料桶，露点：-40°C。标准设备配置5L/10L原料上料料斗和2L/7L干燥料上料料斗，1.5kW输送风机和过滤器，水冷式回风冷却器、干燥料定量输送。

The desiccant dryer and conveying system of MDC series is a kind of machine, desiccant dryer, material hopper, conveying system installed on a safe, convenient mobile car.Dry air flow from 80m³/ h to 100m³/ h, equiped 40L/80L/120L/160L/200L/300Lhopper, dew point: to -40°C.Standard equiped 5L/10L material loader or 2L/7L material loader, 1.5 kW conveying blower and filter, water-cooled after cooler, dry and quantitative conveying.

MDC 시리즈는 제습기,건조호파 등 이송시스템 전체를 안전하고 편리한 이동형틀에 통합화된 제습식건조이송 시스템 입니다. 본 시리즈는 브로워용량이 80 m³/h 에서 100m³/h 까지, 호파는 40L/80L/120L/160L /200L/300L다양한 용량으로 현실화되있고 노점은 평균 - 40°C입니다.
기본사양:5L/10L 원료이송호파,2L /7L건조원료이송호파,1.5kW BLOWER 및 필터,수냉식쿨러,건조원료정량이송.

主要技术特征：
- LCD中文显示器
- PLC可编程控制
- 预约开机功能
- 回风超温报警
- 干燥风超温报警
- 压缩空气低压报警
- 再生不良报警

Main technical characteristics:
- LCD display in Chinese
- PLC programmable control
- Start timer
- Return air over heating alarm
- Process air over heating alarm
- Compressed air low pressure alarm
- Abnormal regeneration alarm

주요기술특징:LCD 중국어 모니터, PLC 프로그래밍 제어기, 설비예약 타이머, 리턴에어고온경보, 건조 에어고온경보, 압축공기저압경보, 재생불량경보.

Technical Specifications

			MDC-25U	MDC-50U	MDC-75U	MDC-100U	MDC-150U	MDC-200U
干燥温度/Process temperature	MT	°C	70-150	70-150	70-150	70-150	70-150	70-150
	HT	°C	70-190	70-190	70-190	70-190	70-190	70-190
露点/Dew point		°C	-40	-40	-40	-40	-40	-40
干燥风量/Air flow		m³/h	80	80	100	100	150	150
干燥桶容量/Hopper volume		dm³	40	80	120	160	200	300
静态压力/Static pressure		mbar	120	120	160	160	170	170
干燥风机/Process blower power		kW	0.55	0.55	0.85	0.85	1.6	1.6
干燥加热功率/Process heating power	MT/HT	kW	2.4/4.8	2.4/4.8	4.8/4.8	4.8/4.8	4.8/7.2	7.2/7.2
再生电热功率/Regen. heating power		kW	2	2	2	2	2	2
输送风机/Regen. blower power		kW	1.5	1.5	1.5	1.5	1.5	1.5
真空斗容量/Vacuum hopper volume		dm³	05/02	05/02	05/02	05/02	10/07	10/07
安装功率/Total installed power	MT/HT	kW	6.5/9	6.5/9	9/9	9/9	10/12	12/12
电压/Voltage		V/Hz	380/50	380/50	380/50	380/50	380/50	380/50
重量/Weight		kg	190	210	230	250	300	350

MDC25U-200U

TCON

MDC-200U

MDC-100U

MDC-50U-2

Combinations	H40	H80	H120	H160	H200	H300
DR80	•	•				
DR100	•••	••	•	•		
DR102	•••	••	••	•	•	•

Dimensions		MDC-25U	MDC-50U	MDC-75U	MDC-100U	MDC-150U	MDC-200U
H	mm	1650	1700	1750	1850	2100	2400
W	mm	1020	1050	1050	1200	1200	1500
D	mm	900	900	900	900	900	950

DR102(P)-105(P)

TCON

DR102-105和DR102P-105P系列除湿式干燥机的设计是实现从吸湿热塑性颗粒原料中除去水分。这个系列模式范围包括干燥风的流量从150m³/h到550m³/h,满足所有在生产上的要求，露点-40°C~-50°C。

标准除湿单元的主要技术特征是: 每日或每周定时器用于机器的自动运行;带有LCD显示器和键盘的微处理器控制面板;主要组件在与干燥风接触的部分均为不锈钢结构;高风压,低噪声环流风机;高过滤能力的空气过滤器; 安全保护: 过热保护组件;带有键盘、触摸屏显示的用户介面;可以和多种不同的从40到1500升干燥料斗组成除湿干燥设备; 不锈钢干燥料斗的绝热厚度从60到100毫米。

The desiccant dryers of the DR102~105 and DR102P~105P series are designed and implemented in order to remove moisture absorbed in hygroscopic thermoplastic granular materials. The range include a series of models, with process air flow ranging from 150m³/h up to 550m³/h, suitable to satisfy every requirement in production. With dew point up to-40°C~-50°C.

The main technical features of the standard desiccant units are: machine automatic running with daily-weekly timer; microprocessor control panel with LCD display and keypad; the main components are in contact with process air made in stainless steel; high-head lownoise side-channel blowers; filters for air with high filtering capacity; safety protections to save components from over-heating; end- user interface with keypad， Touch Screen display; possibility to couple the desiccant dryer with a wide range of maintenance hoppers, from 40 up to 1500 litres; stainless steel hoppers with thickness of insulation from 60 to 100 mm.

DR102~105 와 DR102P~105P 시리즈 제습식건조기는 흡습열가소성과립원료중 수분 제거를 위한 설비 입니다.

본 시리즈 유형 범위는 건조풍의 수송량이 150m³/h~ 550m³/h까지 어떠한 생산 요구에도 적합하고 만족하며 노점은-40°C~-50°C입니다.

설비주요기술특징:매일 혹은 매주 설비의 자동운행 타이머,LCD 모니터와 키보드식 마이크로 프로세서 제어판,설비중 건조에어와 접촉되는 부분은 모두 스테인레스 스틸구조;고압저소음리턴브로워;고여과능력의 에어필터;안전보호:과열보호부품; 키보드、터치스크린 디스플레이;40리터 에서 1500리터까지 다양한 종류의 호파와 제습건조설비를 조합가능;스테인레스 스틸 호파 단열층두께는 60mm 에서 100mm 까지.

选项:
- 露点控制
- 触摸屏面板
- 便携式露点仪
- 声音报警
- 过滤器阻塞压力开关
- 干燥风温度安全控制
- 外部露点连接接口

Options:
- Dew Point control
- Operator touch screen panel
- Portable Dew Point
- Acoustic alarm
- Clogged filter pressure switch
- Dedicated process air temperature safety control
- Plug for external Dew Point connection

Technical Specifications

			DR102	DR102P	DR103	DR103P	DR104	DR104P	DR105	DR105P
干燥温度/Process temperature	MT	°C	70-150	70-150	70-150	70-150	70-150	70-150	70-150	70-150
	HT	°C	70-190	70-190	70-190	70-190	70-190	70-190	70-190	70-190
露点/Dew point		°C	-40	-50	-40	-50	-40	-50	-40	-50
干燥风量/Air flow		m³/h	150	200	300	350	400	450	500	550
静态压力/Static pressure		mbar	170	150	250	250	200	200	250	250
干燥风机/Proc. blow .Power		kW	1.6	1.6	3	3	4	4	5.5	5.5
再生风机/Regen. blow . Power		kW	NO	0.2	NO	0.2	NO	0.4	NO	0.4
干燥加热功率/Process heating power	MT/HT	kW	4.8/7.2	4.8/7.2	7.2/10.8	7.2/10.8	10.8/14.4	10.8/14.4	14.4/18	14.4/18
再生电热功率/Regen. heating power		kW	2	3.5	3.5	3.5	5	5	5	5
安装功率/Tot. installed power	MT/HT	kW	8.5/11	10/12.5	14/17.5	14/17.5	20/24	20/24	25/28.5	25/28.5
电压/Voltage		V/Hz	380/50	380/50	380/50	380/50	380/50	380/50	380/50	380/50
重量/Weight		kg	135	310	310	330	330	350	350	370

DR102P-105P

DR102

Combinations	H40	H80	H120	H160	H200	H300
DR102	●●●●	●●●	●●	●	●	●

Combinations	H300	H400	H600	H800	H1000	H1500
DR102P	●	●				
DR103	●●	●	●	●		
DR103P	●●	●	●	●		
DR104	●●	●●	●●	●	●	
DR104P	●●	●●	●●	●	●	
DR105	●●●	●●●	●●	●●	●	●
DR105P	●●●	●●●	●●	●●	●	●

Dimensions		DR102	DR102P	DR103	DR103P	DR104	DR104P	DR105	DR105P
H	mm	1200	1800	1800	1800	1800	1800	1800	1800
W	mm	450	900	900	900	900	900	900	900
D	mm	850	1000	1000	1000	1000	1000	1000	1000

DR106-224

TCON

DR106-DR224系列除湿式干燥机的设计是实现从吸湿热塑性颗粒原料中除去水分。这个系列模式范围包括干燥风的流量从600m³/h到2200m³/h, 满足所有在生产上的要求，露点-50°C。

标准除湿单元的主要技术特征是：每日或每周定时器用于机器的自动运行;带有LCD显示器和键盘的微处理器控制面板;主要组件在与干燥风接触的部分均为不锈钢结构;高风压,低噪声环流风机;高过滤能力的空气过滤器；安全保护:过热保护组件;带有键盘、触摸屏显示的用户介面;可以和多种不同的从800到7000升干燥料斗组成除湿干燥设备；不锈钢干燥料斗的绝热厚度从60到100毫米。

The desiccant dryers of the DR106-DR224 series are designed and implemented in order to remove moisture absorbed in hygroscopic thermoplastic granular materials. The range include a series of models, with process air flow ranging from 600m³/h up to 2200m³/h, suitable to satisfy every requirement in production. With dew point up to-50°C.

The main technical features of the standard desiccant units are: machine automatic running with daily-weekly timer; microprocessor control panel with LCD display and keypad; the main components are in contact with process air made in stainless steel; high-head lownoise side-channel blowers; filters for air with high filtering capacity; safety protections to save components from over-heating; end- user interface with keypad， Touch Screen display; possibility to couple the desiccant dryer with a wide range of maintenance hoppers, from 800 up to 7000 litres; stainless steel hoppers with thickness of insulation from 60 to 100 mm.

DR106~DR224 시리즈 제습식건조기는 흡습열가소성과립원료중수분 제거를 위한 설비 입니다.
본 시리즈 유형 범위는 건조풍의 수송량이 600m³/h~ 2200m³/h까지 어떠한 생산 요구에도 적합하고 만족하며 노점은 -50°C 입니다.
주요기술특징:매일 혹은 매주 설비의 자동운행 타이머,LCD 모니터와 키보드식 마이크로 프로세서 제어판,설비중 건조에어와 접촉되는 부분은 모두 스테인레스 스틸 구조;고압저소음리턴브로워;고여과능력의 에어필터; 안전보호:과열보호부품;키보드、터치스크린 디스플레이;800리터에서 7000 리터까지 다양한 종류의 호파와 제습건조설비를 조합가능;스테인레스 스틸 호파 단열층두께는 60mm 에서 100mm까지.

选项:
- 露点控制
- 触摸屏面板
- 便携式露点仪
- 声音报警
- 过滤器阻塞压力开关
- 干燥风温度安全控制
- 外部露点连接接口

Options:
- Dew Point control
- Operator touch screen panel
- Portable Dew Point
- Acoustic alarm
- Clogged filter pressure switch
- Dedicated process air temperature safety control
- Plug for external Dew Point connection

Technical Specifications			DR106	DR108	DR110	DR115	DR118	DR220	DR224
干燥温度/Process temperature	MT	°C	70-150	70-150	70-150	70-150	70-150	70-150	70-150
	HT	°C	70-190	70-190	70-190	70-190	70-190	70-190	70-190
露点/Dew point		°C	-50	-50	-50	-50	-50	-50	-50
干燥风量/Air flow		m³/h	600	750	1000	1350	1500	2000	2200
静态压力/Static pressure		mbar	250	250	200	200	200	200	200
干燥风机/Proc. blow . Power		kW	5.5	7.5	8.5	12.5	15	18.5	12.5+12.5
再生风机/Regen. blow . Power		kW	0.85	0.85	0.85	1.5	1.5	4	4
干燥加热功率/Process heating power	MT/HT	kW	18/24	24/30	30/36	40.5/54	40.5/54	NO/67.5	NO/81
再生电热功率/Regen. heating power		kW	12	12	12	18	18	24	24
安装功率/Tot. installed power	MT/HT	kW	36/42	44/50	51/57	72.5/86	75/88.5	NO/113.5	NO/114
电压/Voltage		V/Hz	380/50	380/50	380/50	380/50	380/50	380/50	380/50
重量/Weight		kg	1300	1330	1400	1450	1500	1650	1700

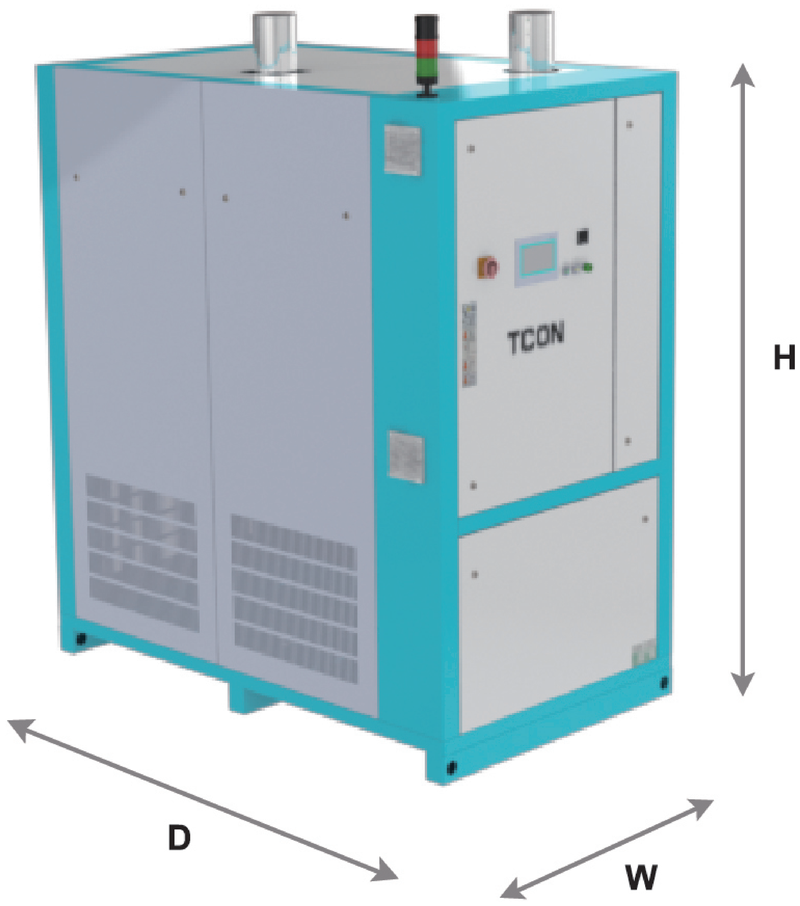

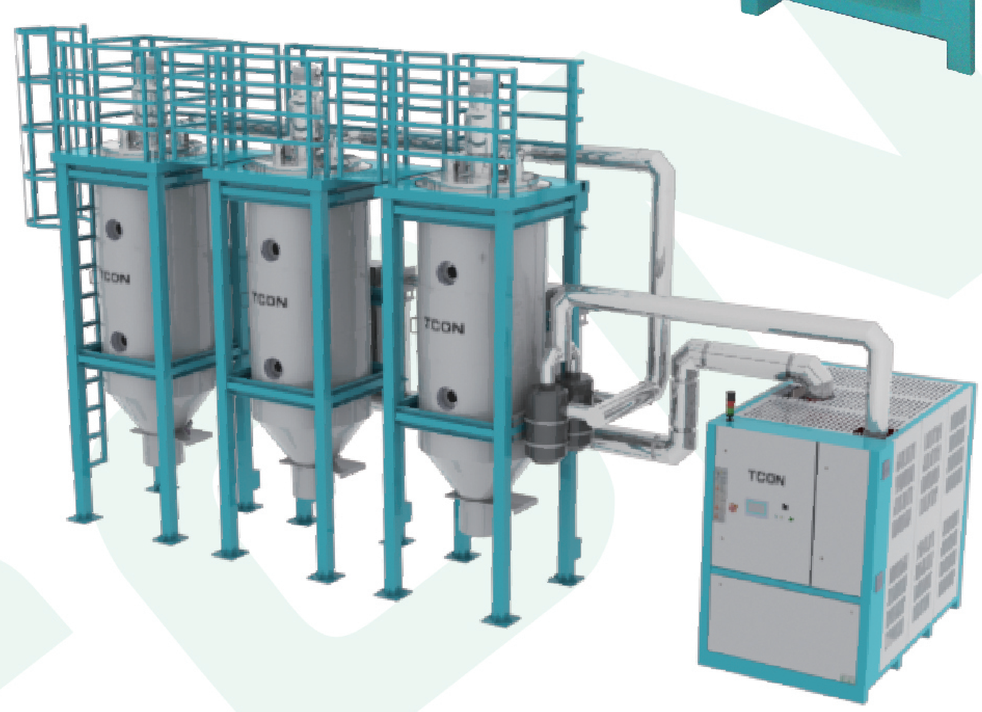

Combinations	H800	H1000	H1500	H2000	H2500	H3000	H3500	H4000	H4500
DR106	●●	●	●	●					
DR108	●●	●	●	●	●				
DR110	●●●	●	●	●	●	●			
DR115	●●●	●●	●●	●●	●	●	●	●	
DR118	●●●	●●	●●	●●	●	●	●	●	●

Combinations	H4500	H5000	H5500	H6000	H7000
DR220	●	●	●		
DR224			●	●	●

Dimensions		DR106	DR108	DR110	DR115	DR118	DR220	DR224
H	mm	2180	2180	2180	2180	2180	2220	2220
W	mm	1210	1210	1210	1210	1210	1650	1650
D	mm	1850	1850	1850	1850	1850	1700	1700

H40-H7000

TCON

干燥料斗容量从40到7000升，采用AISI304不锈钢。200升以下的料斗隔热层厚60mm，300升以上的料斗隔热层厚100mm, 外部采用1mm铝板包装。从H150以上料斗配有标准观察门。采用回风纸滤筒，高温场合采用金属滤筒。

Drying hoppers available from 40 to 7000 litres in stainless steel AISI304.Glass-wool insulation of 60 mm thickness up to 200 litres hopper and 100 mm thick from 300 litres upwarfs,covered with aluminium panels of 1mm thickness. Standard inspection door from H150.Available return air cartridge filters in paper or metal for high temperatures.

호파 용량은 40리터에서 7000리터까지이고 AISI304 스테인레스 스틸을 채용하였습니다.200리터 이하의 호파 단열층두께는 60mm이고 300리터 이상의 호파 단열층두께는 100mm이며 외부는 1mm 알루미늄이중보온호파를 채용하였습니다.H150 이상 원료호파는 기본 감시창과 리턴에어 종이필터를 사용하고 고온부분은 금속필터를 사용합니다.

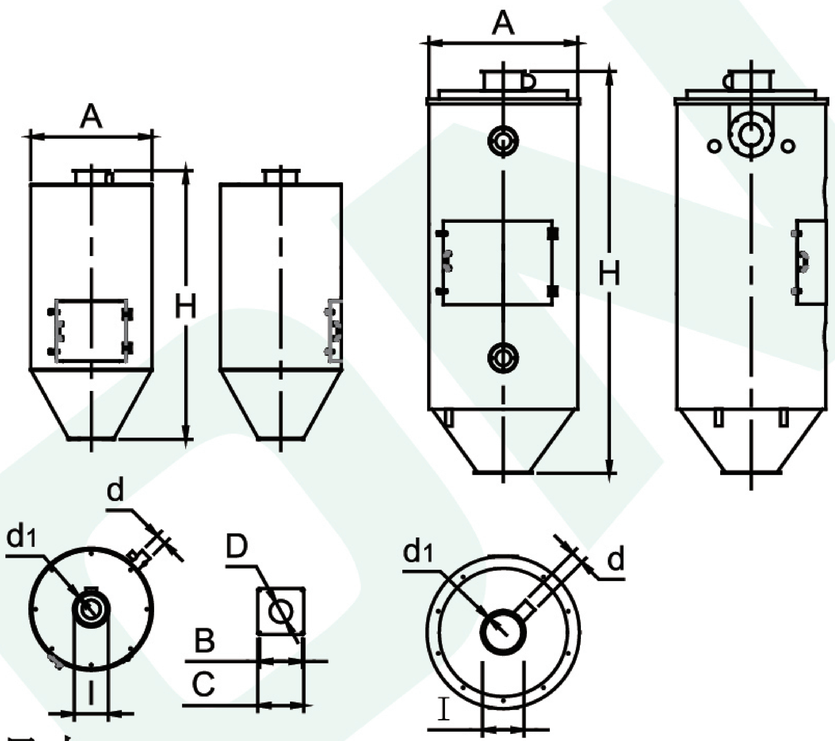

干燥料斗尺寸

DRYING HOPPER DIMENSIONS

	Capacity	A	H	d	B	C	D	I	d1
	dm3	mm	mm	mm	mm	mm	mm	mm	mm
H40	40	437	906	50	155	185	60	280	4xM6
H80	80	516	916	50	210	235	76	280	4xM6
H120	120	516	1126	50	210	235	76	280	4xM6
H160	160	597	1266	50	210	235	76	280	4xM6
H200	200	597	1556	50	210	235	76	280	4xM6
H300	300	832	1735	89	350	380	125	280	8xM6
H400	400	832	1985	89	350	380	125	280	8xM6
H600	600	992	2053	89	350	380	125	280	8xM6
H800	800	992	2453	89	350	380	125	280	8xM6
H1000	1000	1060	3000	125	250	400	129	280	8xM6
H1500	1500	1060	3323	125	250	400	129	280	8xM6
H2000	2000	1240	3295	150	250	400	129	280	8xM6
H2500	2500	1240	3795	150	250	400	129	280	8xM6
H3000	3000	1450	3910	200	250	400	129	280	8xM6
H3500	3500	1450	4310	200	250	400	129	280	8xM6
H4000	4000	1550	3922	200	250	400	129	280	8xM6
H4500	4500	1550	4172	200	250	400	129	280	8xM6
H5000	5000	1700	4032	200	250	400	129	280	8xM6
H5500	5500	1700	4282	200	250	400	129	280	8xM6
H6000	6000	1850	4140	200	250	400	129	280	8xM6
H7000	7000	1850	4540	200	250	400	129	280	8xM6